UW-10~50

UW - 10 - □ - □ - AC110 - □

- **UW** — MODEL
- **10** — Pipe Size
  - 10 : 3/8"
  - 15 : 1/2"
  - 20 : 3/4"
  - 25 : 1"
  - 35 : 1 1/4"
  - 40 : 1 1/2"
  - 50 : 2"
- **□** — Coil
  - □ : Standard coil
  - D : Waterproof DIN COIL (under 130°C)
  - N : NASS DIN COIL (under 130°C)
  - I : Waterproof COIL 2 wire type (under 130°C)
- **□** — Operating Fluid
  - □ : Standard (water, air)
  - LO : Light oil
- **AC110** — Voltage
  - AC220V(50/60)HZ
  - AC110V(50/60)HZ
  - DC24V
- **□** — Thread
  - □ : Standard (BSPT or PT)
  - BSP: BSPP or PF
  - NPT: NPT

NC

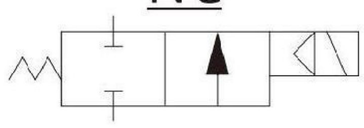

PRODUCT DESCRIPTION

- UW series is direct, multiplex, connected diaphragm, conductive and normally closed (NC) 2/2 way solenoid valve.
- Able to be operated directly under low pressure
- Availability of fluid type: water, air, light oil
- Acceptable for customization Viton (130℃) , Silicone (130℃) and EPDM (130℃, only available for UW-20~UW-25)

CAUTIONS:

- Before pipelining, the pipe line must be very clean without any contaminants or any other things not ought to be existed.
- To prolong the life time of the product, Y-line filter should be installed in the front end of solenoid valve.
- AC voltage tolerance: ± 10%; DC voltage tolerance: ± 1%
- It should be installed horizontally; vertical installation is not advisable.

Not Suitalbe For Fluid As Below:

- Liquid status when it is high temperature; solid status when it is cool.
- Corrosive fluid
- Viscosity over 20cst

MATERIAL:

PARTS	Coil	Tube	Spring	Core	Plug	Diaphragm	Valve body
MATERIAL	Special copper wire (H class)	Stainless steel	Stainless steel	Stainless steel	NBR	NBR	Brass

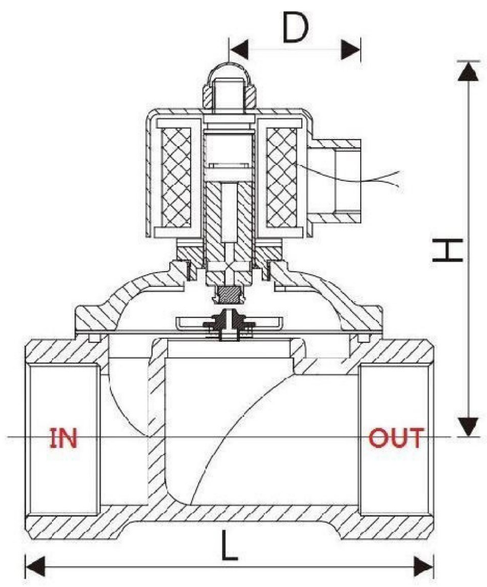

SPECIFICATION

MODEL	Waterproof DIN/flying lead Coil	NASS DIN Coil (IP65)	PIPE SIZE	CV	ORIFICE	FLUID TEMP. (°C)	Operating Pressure kgf / cm² (bar)			High Pressure Type		Dimension (mm)			Weight (kg)
							Water	Air	Light oil	Water	Air	L	H	D	
UW-10	●	●	3/8"	4.5	15mm	-5°C ~ +80°C	0~5	0~7	0~5	0.5~10	0.5~20	70	100	48	1.01
UW-15	●	●	1/2"	4.5	15mm	-5°C ~ +80°C	0~5	0~7	0~5	0.5~10	0.5~20	70	100	48	1
UW-20	●	●	3/4"	8.6	20mm	-5°C ~ +80°C	0~5	0~7	0~5	0.5~10	0.5~20	73	107	48	1.14
UW-25	●	●	1"	12	25mm	-5°C ~ +80°C	0~5	0~7	0~5	0.5~10	0.5~20	100	112	48	1.7
UW-35	●	●	1 1/4"	24	35mm	-5°C ~ +80°C	0~5	0~7	0~5	0.5~10	0.5~20	125	113	48	2.32
UW-40	●	●	1 1/2"	28	40mm	-5°C ~ +80°C	0~5	0~7	0~5	0.5~10	0.5~20	125	118	48	2.53
UW-50	●	●	2"	48	50mm	-5°C ~ +80°C	0~5	0~7	0~5	0.5~10	0.5~20	167	125	48	4.32

● High Pressure Type Use N/O Coil